140x140x51 mm

250.3 CFM

Specification

Model	Bearing	Rated Valtage	Power Current	Power Consumption	Speed	Airflow	Static Pressure	Noise	Weight	Curve
	● 2BALL ○ Sleeve	(VDC)	(mA)	(WATTS)	(RPM)	(CFM)	(inch-H_2O)	(dB(A))	(g)	
PFE0514B1-0000-A99	●	48	470	22.56	5000	250.3	1.43	61.4	635.0	1

Function

R Type : F99 ／ F Type : G99 ／ PWM : H99, Q99, S99

Air Flow-Static Pressure Characteristics

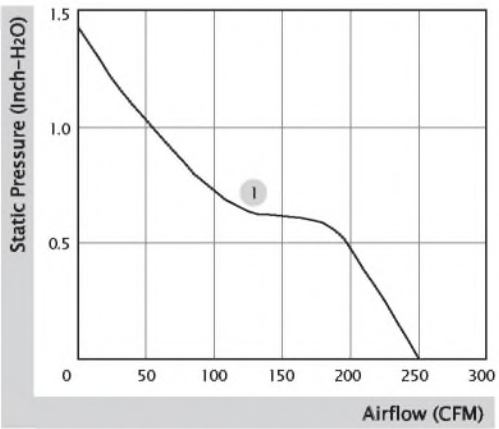

External Dimensions(mm)

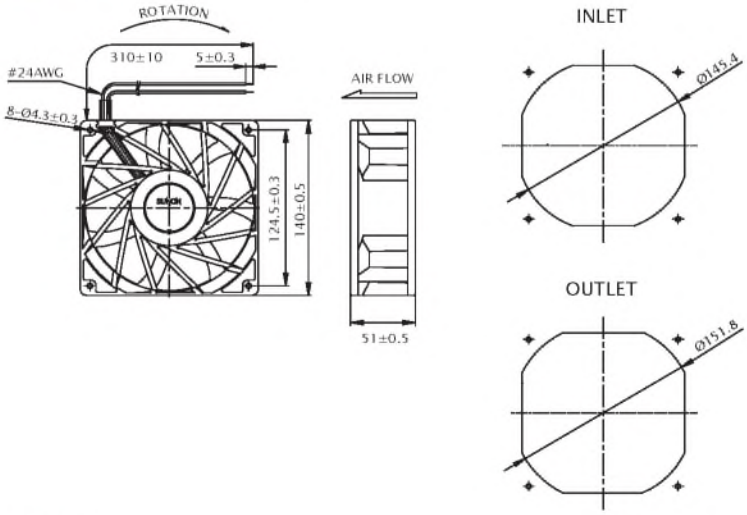

※ All model could be customized. Please contact with Sunon Sales.

※ Specifications are subject to change without notice. Please Visit SUNON website at www.sunon.com for update information.